Concrete Mount Instructions

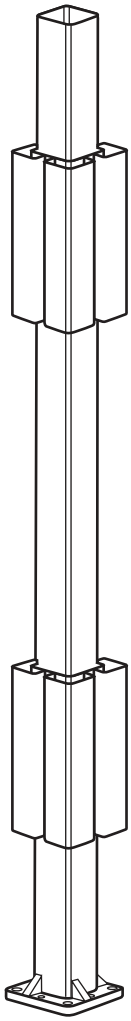

For use with Trex Post Mount mounted to concrete.

Components:

- **(4) ⅜“ x 3” Concrete Bolts**
- **(4) ⅜ x ¾” Hex Bolts**
- **(1) Leveling Plate**
- **(4) Flat Washers**
- **(4) ¾” Self-Tapping Screws**

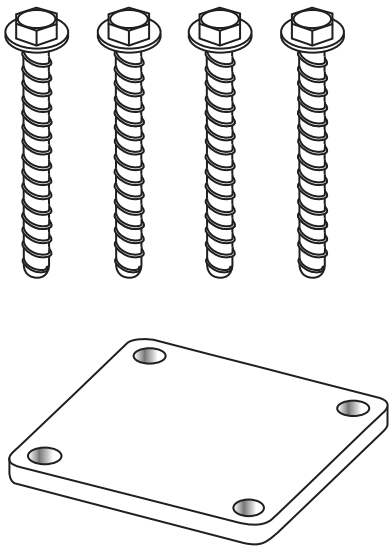

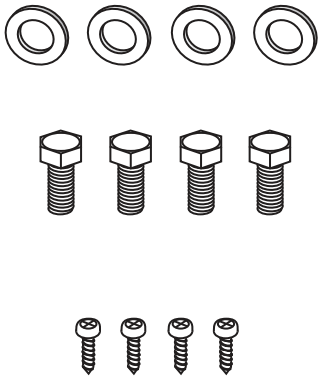

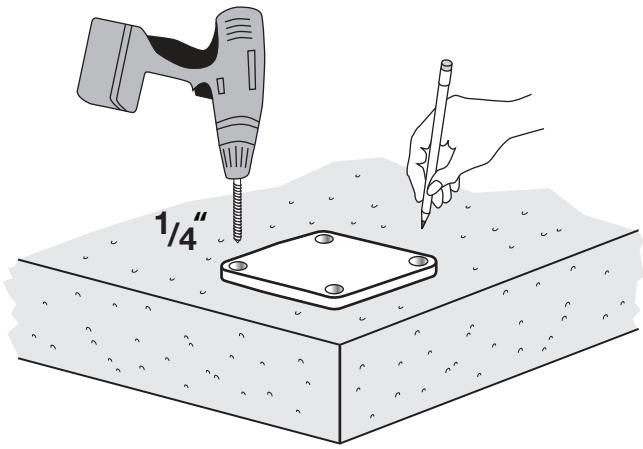

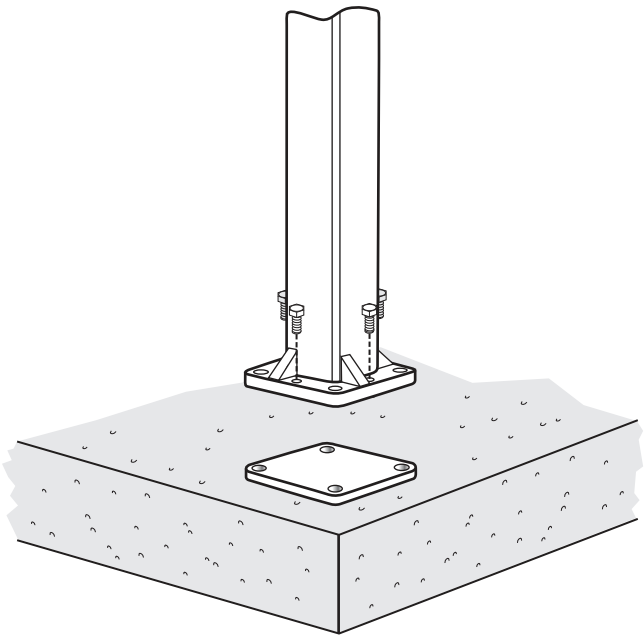

Step 1 - Mark & Drill

Using the leveling plate as a template, mark the locations of the 4 mounting holes to be drilled.

Drill 4 holes in the concrete using a ¼” diameter masonry bit to a minimum of 3½”

Step 2a - Install Leveling Bolts

Partially thread the (4) ¾” hex bolts into the post mount member.

Step 2b - Level the Mount

Place the leveling plate on the concrete and align over the 4 holes.

Align the Post Mount over the leveling plate.

Adjust the ¾" hex bolts to ensure the Post Mount member is plumb.

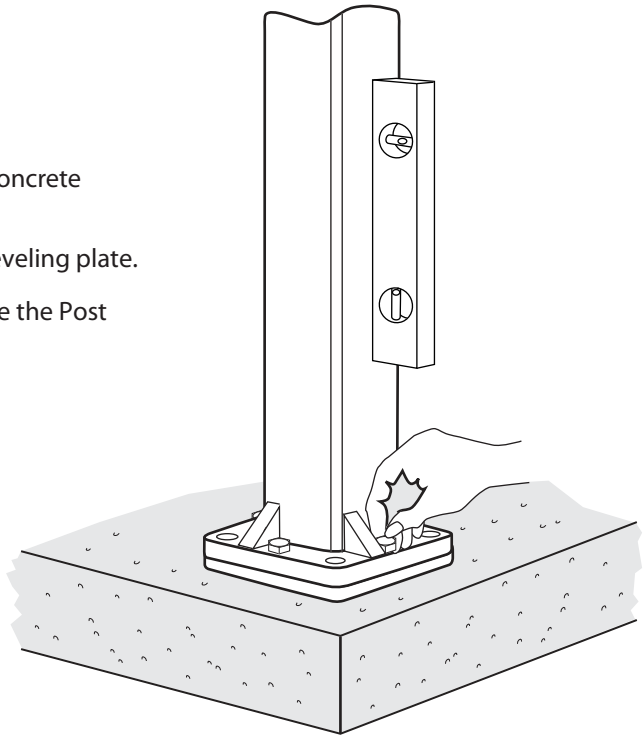

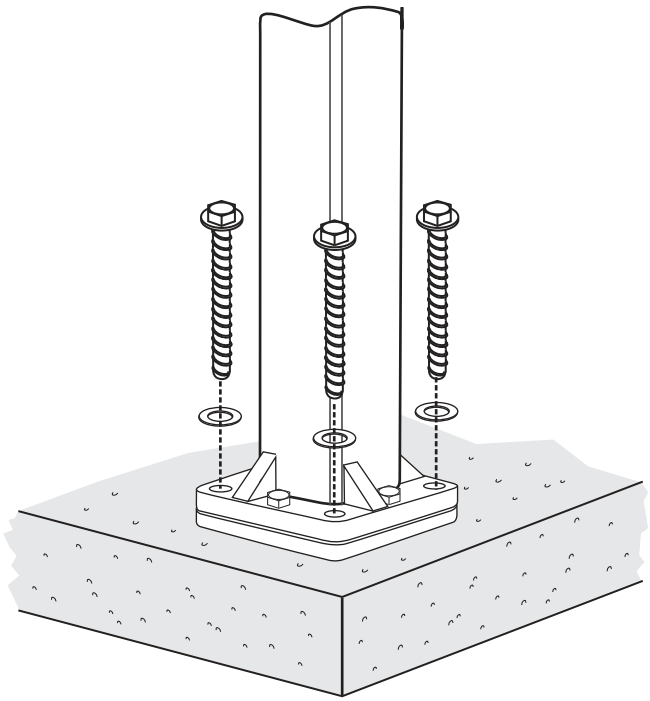

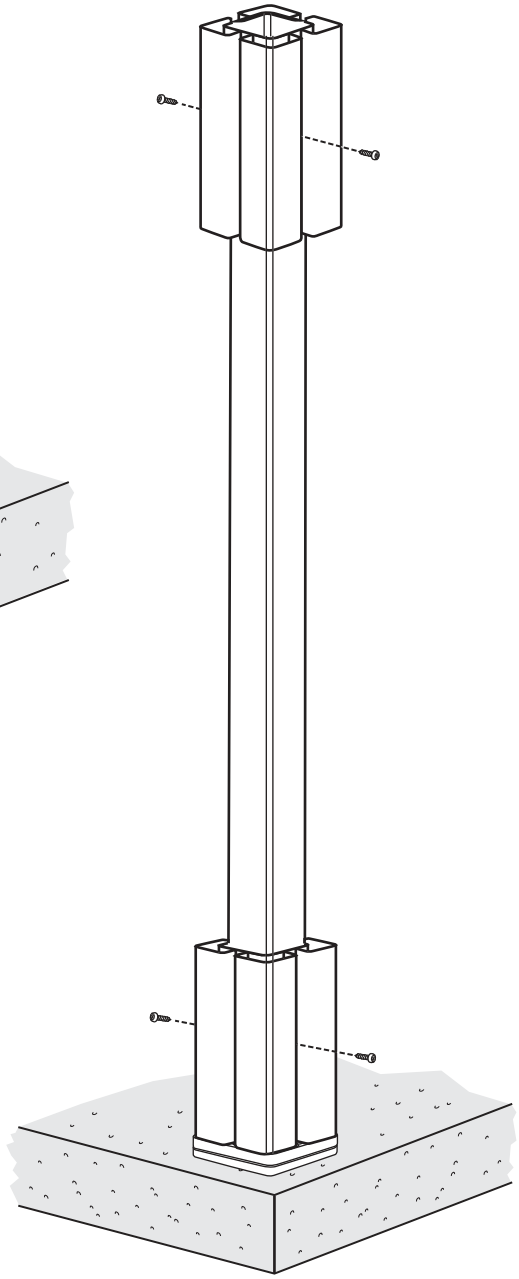

Step 3 - Install the Mounting Bolts

Secure the Post Mount with the 4 concrete bolts and washers.

Note: (5 to 10 ft. lbs. of torque recommended)

Step 4 - Install Guide Blocks

Install the 2 guide blocks onto the post mount member as shown.

Install the supplied self-tapping screws to hold the guide blocks in place.

Step 5 - Install the Railing System of Choice

Have questions?

Visit trex.com or call 1-800-BUY-TREX for railing design ideas and installation instructions.

©2008 Trex Company, Inc. All Rights Reserved. TREX® and the TREX® logo are either federally registered trademarks, trademarks or trade dress of Trex Company, Inc., Winchester, Virginia.